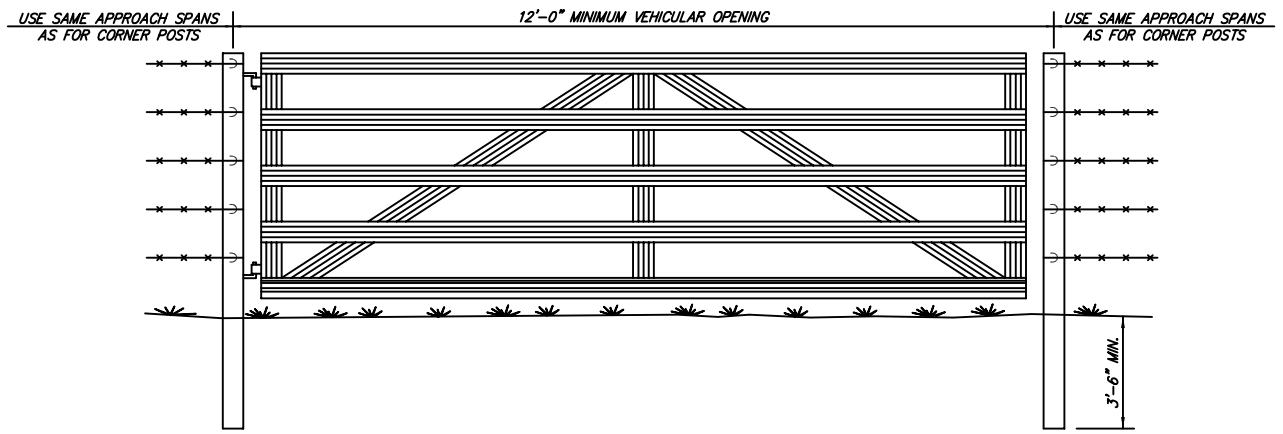

OTHER STYLE VEHICULAR GATES MAY BE USED WITH THE APPROVAL OF THE ENGINEER.
THE METHOD OF SECURING GATE (LATCH AND/OR LOCK) SHALL MEET THE APPROVAL OF THE ENGINEER.

TYPICAL VEHICULAR GATES

N.T.S.

FC.2.1

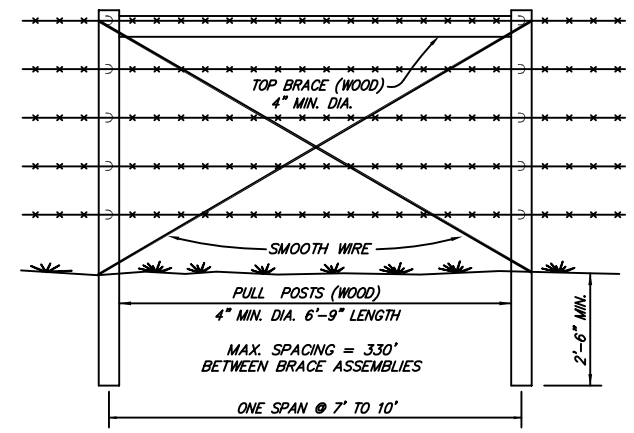

LINE BRACE ASSEMBLY

N.T.S.

FC.2.2

NOTE:
STAPLE AT LEAST TOP, BOTTOM, AND ALTERNATE WIRES OF WOVEN FABRIC FOR WOOD LINE POSTS.

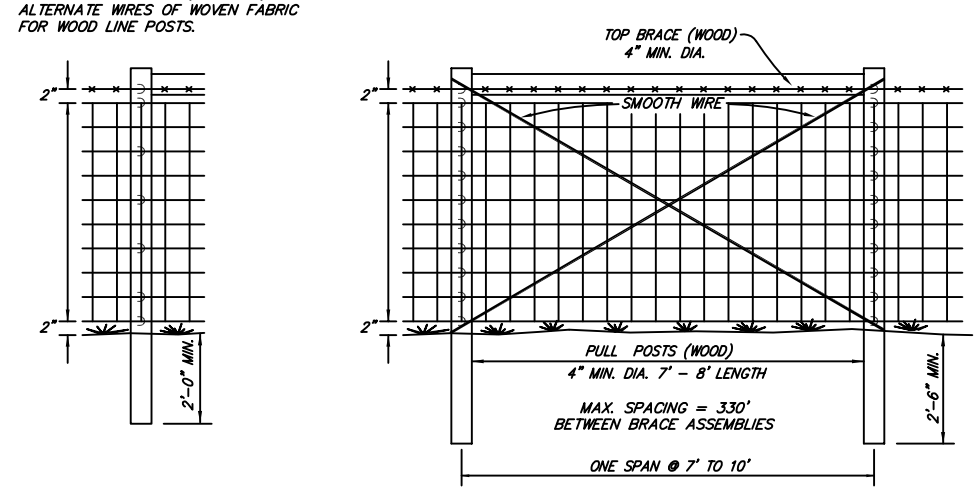

3 1/2" MIN. DIA. LINE POST (WOOD)
6 1/2' - 7'-0" LENGTH
MAX. SPACING TO BE 10'-0"

WOVEN WIRE FENCE (WOOD POSTS)

N.T.S.

FC.2.3

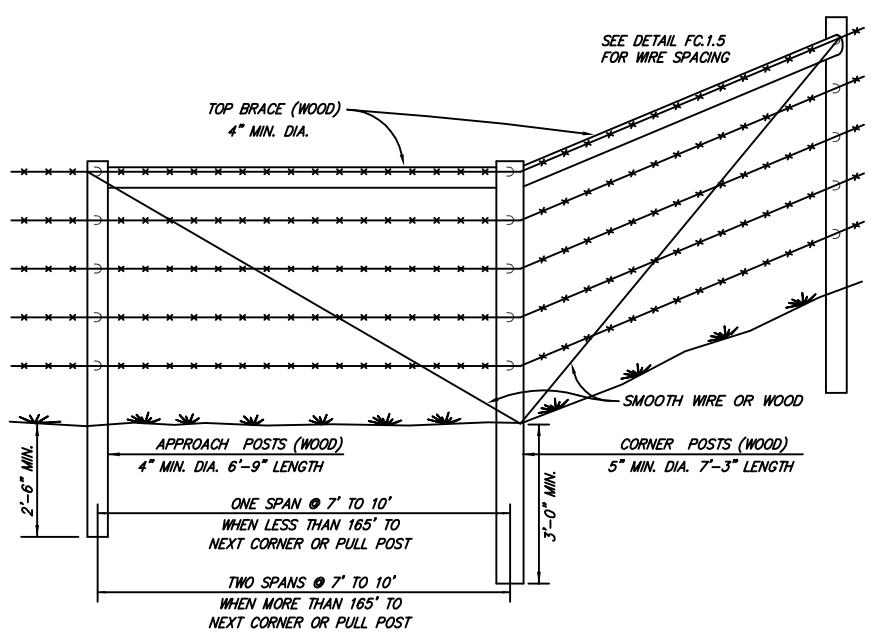

CORNER ASSEMBLY

N.T.S.

FC.2.4

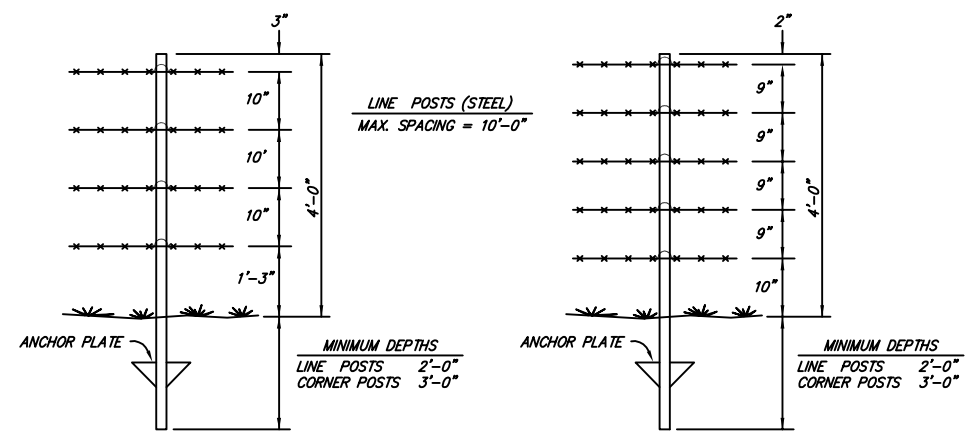

TYPE "D"
4 STRAND

STEEL POST BARBED WIRE FENCING

N.T.S.

FC.2.5

TYPE "D-1"
5 STRAND

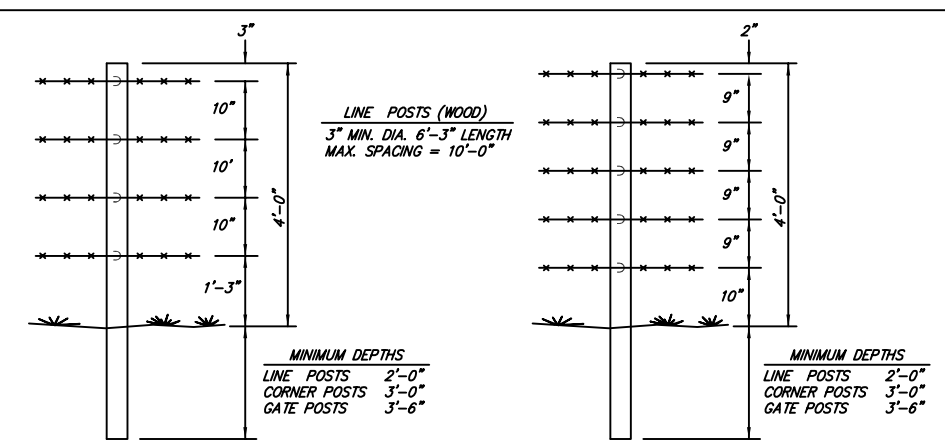

TYPE "D"
4 STRAND

WOOD POST BARBED WIRE FENCING

N.T.S.

FC.2.6

TYPE "D-1"
5 STRAND

NOTES:

1. FENCING ON THIS DRAWING TO BE USED ONLY WHEN REPLACING OR MATCHING EXISTING FENCE.
2. POSTS AND BRACING FOR WOVEN WIRE AND SMOOTH WIRE FENCING SHALL CONFORM TO BARBED WIRE FENCING DETAILS.
3. BARB WIRE SHALL BE 12 1/2 GAGE MINIMUM OR 15 1/2 GAGE HIGH TENSILE, 4 POINT BARBS AT 4'-5' CENTERS, AND SHALL CONFORM TO COMMERCIAL GALVANIZATION.
4. SMOOTH WIRE SHALL BE 9 GAGE AND CONFORM TO COMMERCIAL GALVANIZATION.
5. WOVEN WIRE FARM FENCE SHALL BE AASHTO DESIGN NO. 1047-6-11, GRADE 60, AND CONFORM TO COMMERCIAL GALVANIZATION.
6. STAPLES SHALL BE GALVANIZED, 9 GAGE, 1 1/2" LONG. STAPLE AT LEAST TOP, BOTTOM AND ALTERNATE WIRES OF WOVEN FABRIC FOR WOOD LINE POSTS.
7. HARDWARE AND FITTINGS SHALL CONFORM TO ASTM F626. ANY MISCELLANEOUS HARDWARE OR FITTINGS NOT PREVIOUSLY MENTIONED SHALL BE GALVANIZED IN ACCORDANCE WITH THE APPLICABLE REQUIREMENTS OF AASHTO M 111 OR M 232.
8. STEEL LINE POSTS SHALL BE PAINTED OR GALVANIZED.
9. AN ACCEPTABLE TOLERANCE IN LENGTH OF TUBULAR OR WOODEN POSTS SHALL BE 1" TO +2".
10. TUBULAR POSTS MUST BE PAINTED OR GALVANIZED.
11. SPLICE FOR BARBED WIRE BETWEEN PULL POST ASSEMBLY SHALL BE BY THE "EYE METHOD" AS DESCRIBED AS FOLLOWS:

    THE ENDS OF THE BARBED WIRE SHALL BE BENT TO FORM A LOOP. THE LOOPS SHALL BE CONNECTED. AFTER THE LOOPS ARE CONNECTED, THE ENDS OF THE WIRE SHALL BE WRAPPED AROUND AND PROJECTING WIRES A MINIMUM OF 4 TIMES FOR EACH WIRE LOOP.

12. SPLICE FOR WOVEN WIRE BETWEEN PULL POST SHALL BE BY THE "WESTERN UNION METHOD" AS DESCRIBED AS FOLLOWS:

    THE VERTICAL WIRES FOR EACH END OF THE FENCE FABRIC SHALL BE PLACED SIDE BY SIDE AND THE PROJECTING HORIZONTAL WIRES SHALL BE WRAPPED A MINIMUM OF 4 TIMES AROUND THE HORIZONTAL WIRES OF THE FIRST WEB.

Revision	Date	By

Standard Drawings
FENCING & HANDRAILS
Public Works Construction

The City of Fort Smith Arkansas

CITY OF FORT SMITH
Engineering Department
623 Garrison Avenue, Room 409
Fort Smith, Arkansas 72901
Phone (479)784-2225 Fax (479)784-2245

Project:	Details
Date:	NOV 2012
Scale:	As Shown
Drawn By:	RBR
Dwg. No.:	FC2
Sheet No:	10

G:\DRAWINGS\00-Standard Details\2012\DWG\ 10-FC2.dwg 11/05/12-13:40 RBR