MANHOLE GENERAL NOTES:

1. MANHOLES ARE TO BE CAST IN PLACE OR APPROVED PRECAST.
2. WATERSTOPS MUST BE USED WITH ALL TYPES OF PIPE AT MANHOLE CONNECTIONS.
3. RIM ELEVATION TO BE AS NOTED ON PLANS. IN PAVED AREAS, RIM SHALL BE FLUSH WITH PAVEMENT GRADE AND CROSS SLOPE.

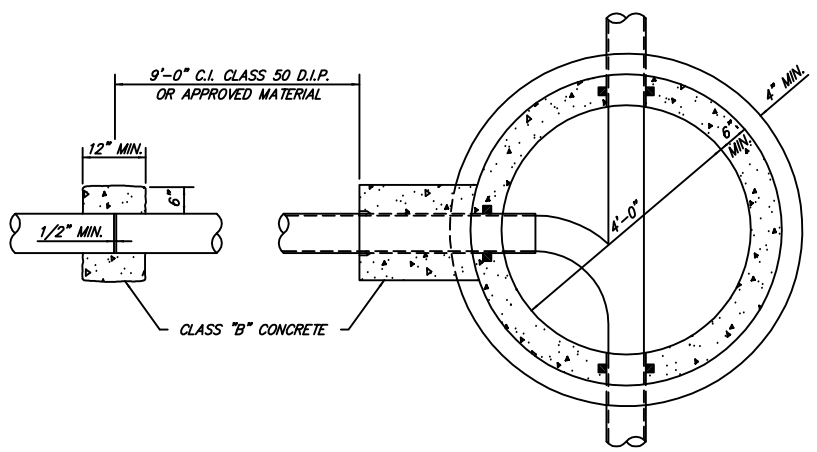

SECTION "A-A"

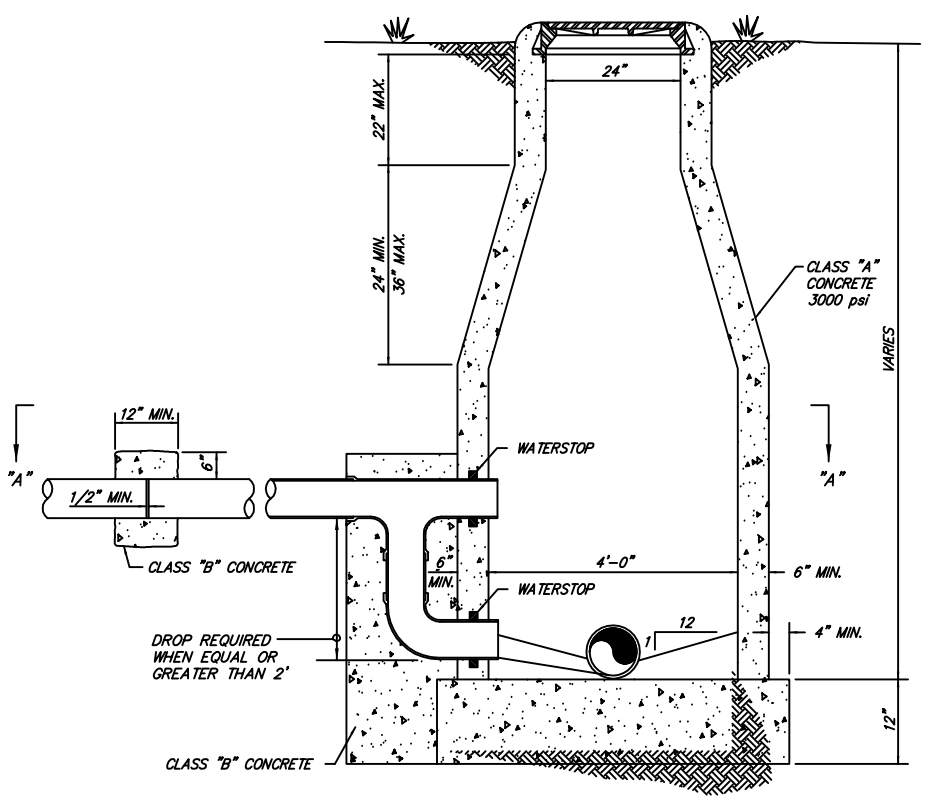

SECTION - TYPICAL DROP MANHOLE
N.T.S.
SS.1.1

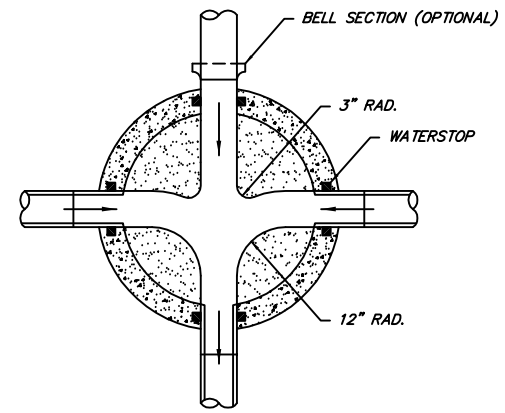

MANHOLE INVERT DETAIL
N.T.S.
SS.1.2

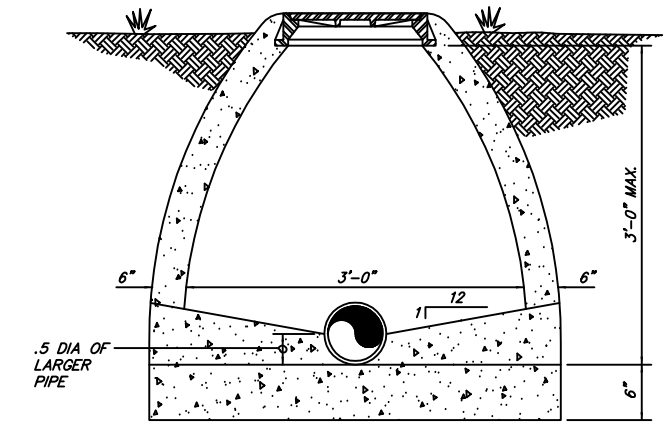

SECTION - TYPICAL
SANITARY SEWER SHALLOW MANHOLE
N.T.S.
SS.1.3

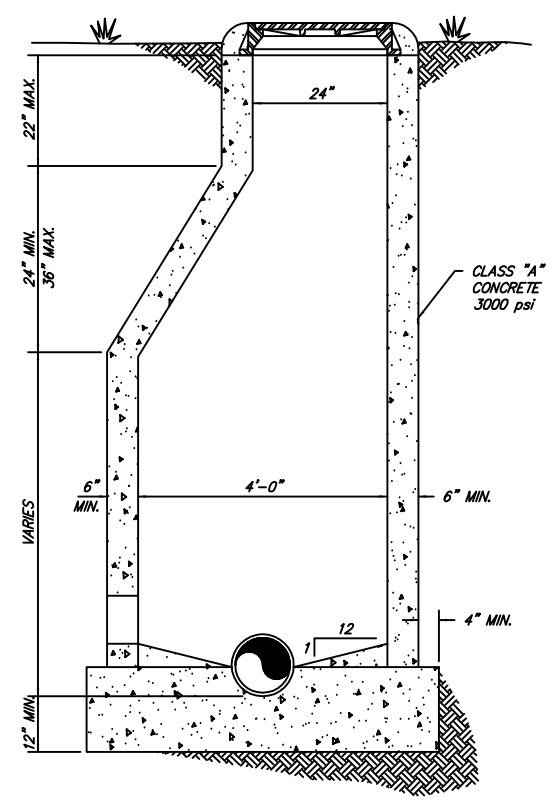

SECTION - TYPICAL OFFSET MANHOLE
N.T.S.
SS.1.4

NOTE:
TRENCHING, BACKFILL AND SURFACE
RESTORATION PER DRAWING ON TB1

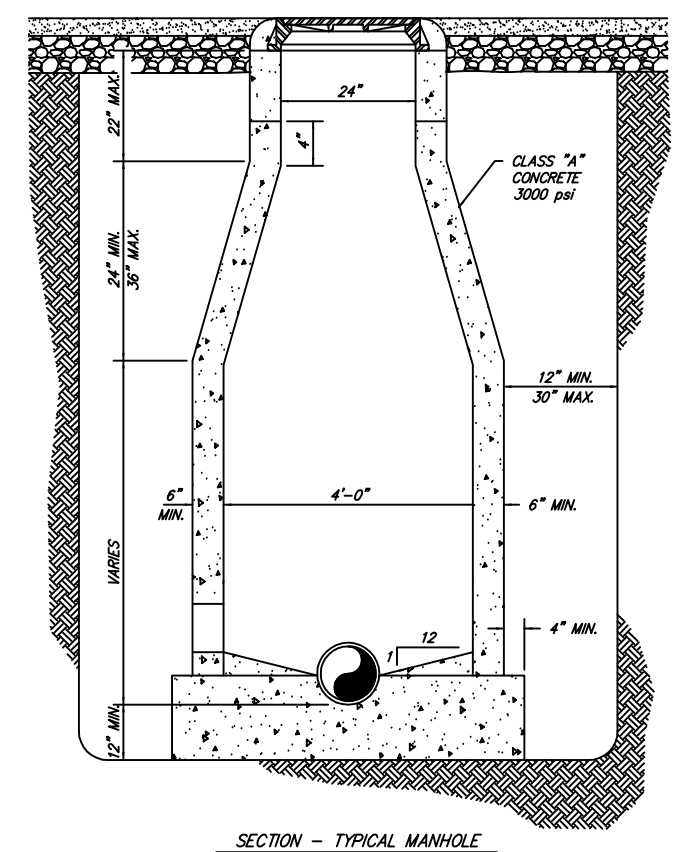

SECTION - TYPICAL MANHOLE
N.T.S.
SS.1.5

Revision	Date	BY
Revised MH diameters.	AUG-2011	MM

Standard Drawings
SANITARY SEWER IMPROVEMENTS
Public Works Construction

The City of Fort Smith ARKANSAS

CITY OF FORT SMITH
Engineering Department
623 Garrison Avenue, Room 409
Fort Smith, Arkansas 72901
Phone (479)784-2225 Fax (479)784-2245

Project:	Details
Date:	NOV 2012
Scale:	As Shown
Drawn By:	RBR
Dwg. No.:	SS1
Sheet No:	12

G:\DRAWINGS\00-Standard Details\2012\DWG\ 12-SS1.dwg 11/05/12-13:42 RBR