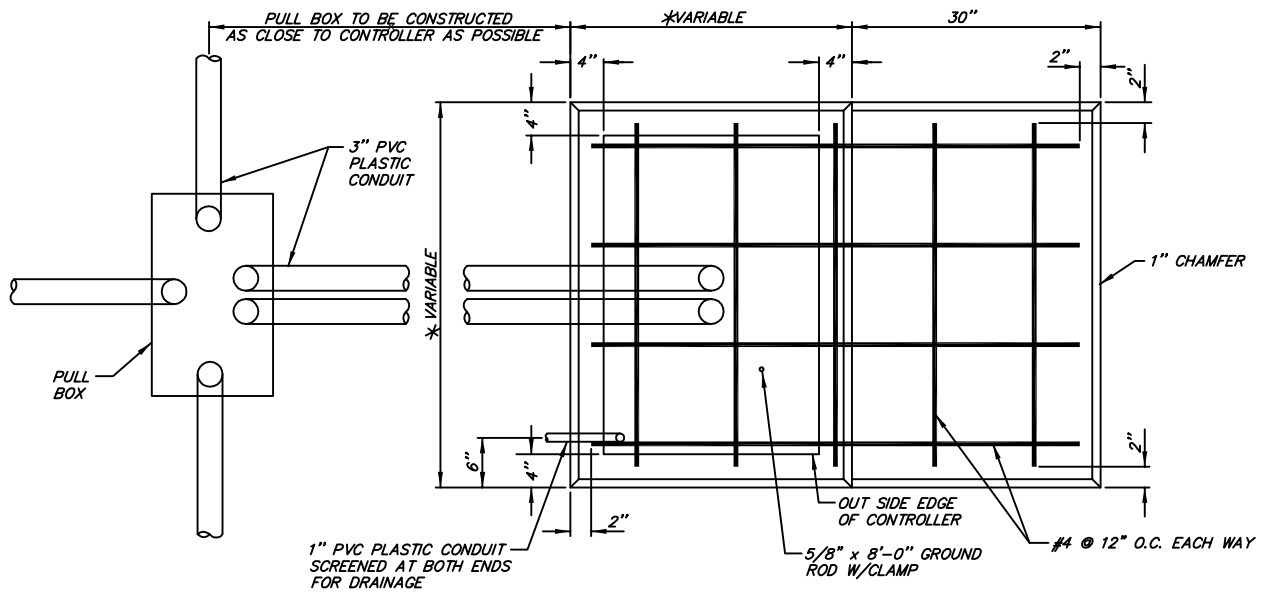

*VARIABLE DIMENSIONS WILL BE DETERMINED BY THE SIZE OF CONTROLLER REQUIRED FOR THIS PROJECT

TOP VIEW

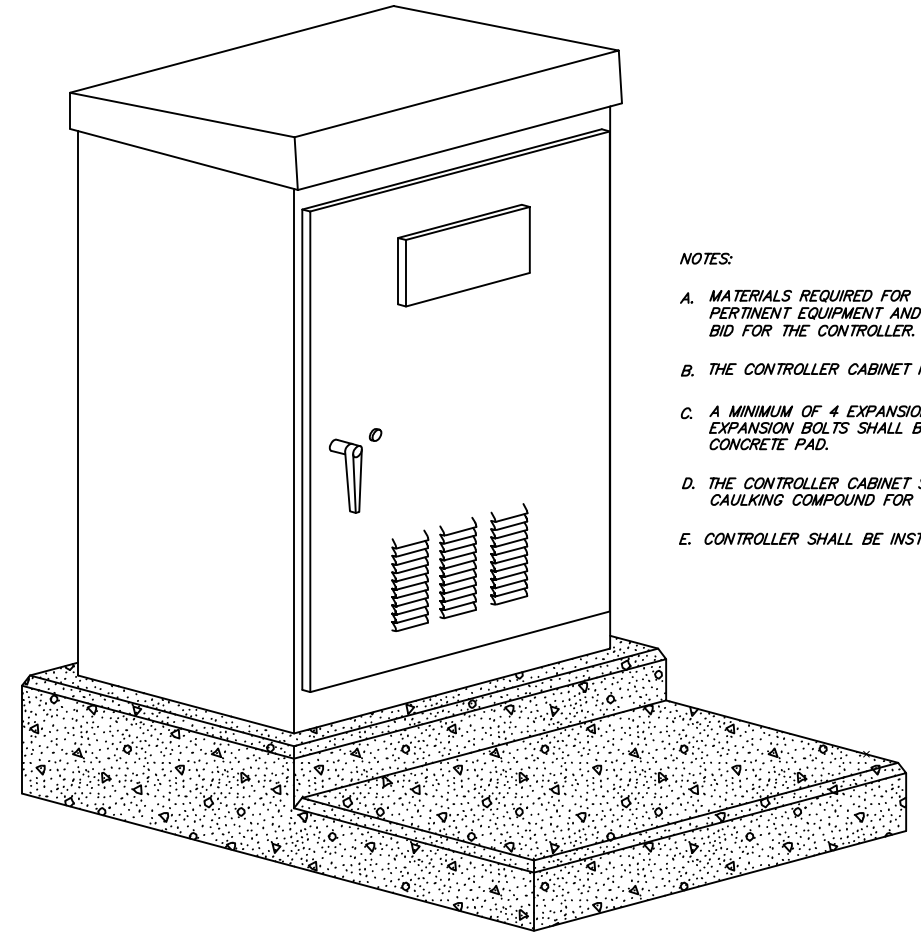

TYPICAL CONTROLLER CABINET INSTALLATION

N.T.S.

NOTES:

A. MATERIALS REQUIRED FOR THE CONTROLLER CABINET FOUNDATION, AND ALL PERTINENT EQUIPMENT AND ASSEMBLY SHALL BE INCLUDED IN THE PRICE BID FOR THE CONTROLLER.

B. THE CONTROLLER CABINET FOUNDATION SHALL BE CLASS "AA", 3500 psi. CONCRETE.

C. A MINIMUM OF 4 EXPANSION BOLTS ARE REQUIRED, 1/2" x 3-3/4" STAINLESS STEEL EXPANSION BOLTS SHALL BE USED TO MOUNT THE CONTROLLER CABINET TO THE CONCRETE PAD.

D. THE CONTROLLER CABINET SHALL BE INSTALLED ON TOP OF SILICANT RUBBER CAULKING COMPOUND FOR WEATHERPROOFING OF THE CABINET.

E. CONTROLLER SHALL BE INSTALLED OUTSIDE OF SIDEWALK AND AT THE R/W LINE.

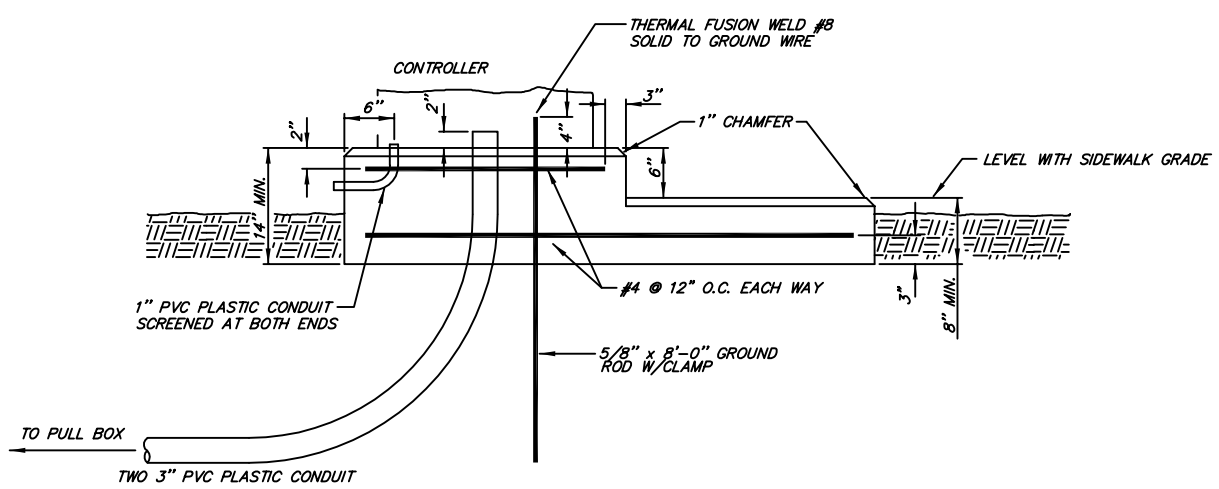

SIDE VIEW

CONCRETE CONTROLLER PAD

N.T.S.

TS.4.1

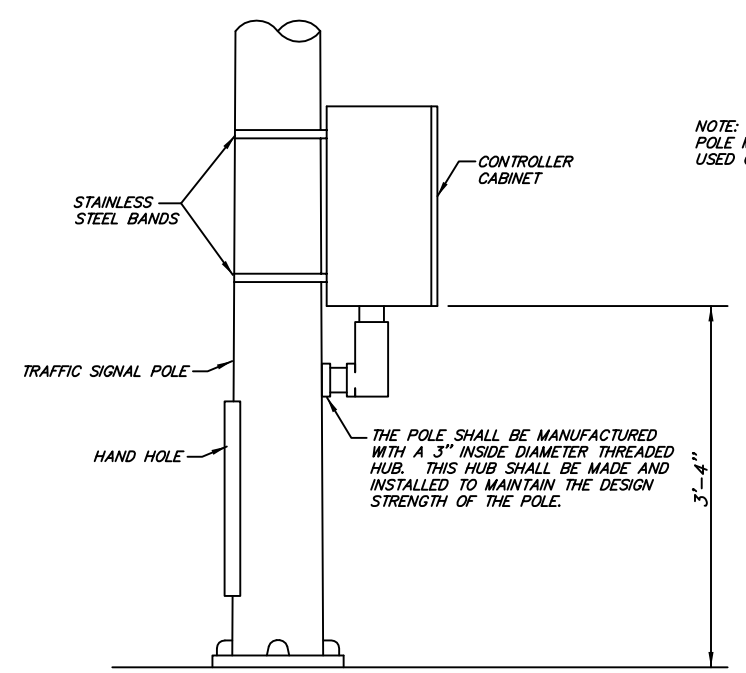

NOTE:
POLE MOUNTED CABINET TO BE USED ONLY WHEN SPECIFIED.

POLE MOUNTED CONTROLLER CABINET

N.T.S.

TS.4.2

Revision	Date	By

Standard Drawings
TRAFFIC SIGNALS
Public Works Construction

The City of Fort Smith ARKANSAS

CITY OF FORT SMITH
Engineering Department
623 Garrison Avenue, Room 409
Fort Smith, Arkansas 72901
Phone (479)784-2225 Fax (479)784-2245

Project:	Details
Date:	NOV 2012
Scale:	As Shown
Drawn By:	RBR
Dwg. No.:	TS4
Sheet No:	35

G:\DRAWINGS\00-Standard Details\2012\DWG\ 35-TS4.dwg 11/05/12-13:56 RBR