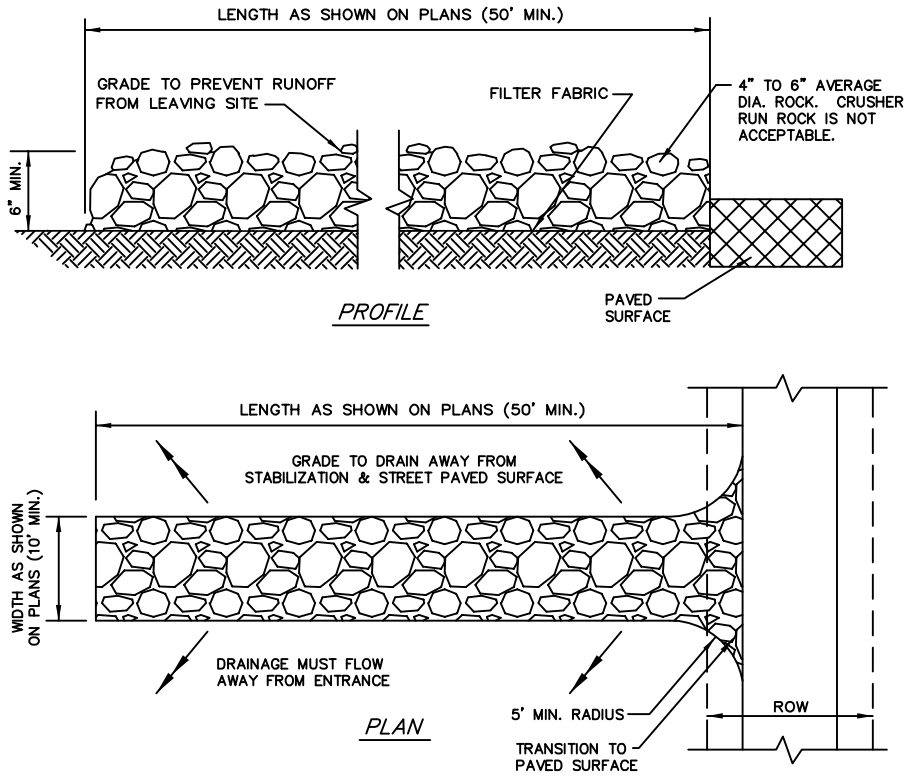

STABILIZED CONSTRUCTION ENTRANCE

N.T.S.

EC.1.1

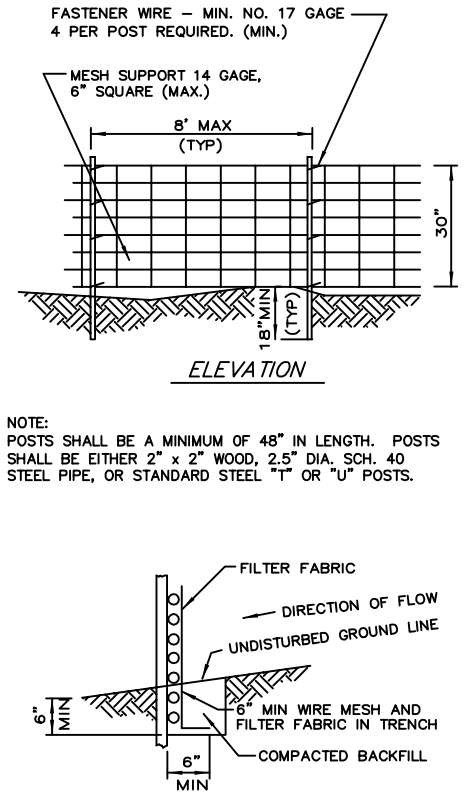

NOTE:
POSTS SHALL BE A MINIMUM OF 48" IN LENGTH. POSTS SHALL BE EITHER 2" x 2" WOOD, 2.5" DIA. SCH. 40 STEEL PIPE, OR STANDARD STEEL "T" OR "U" POSTS.

FABRIC ANCHOR DETAIL

N.T.S.

EC.1.2

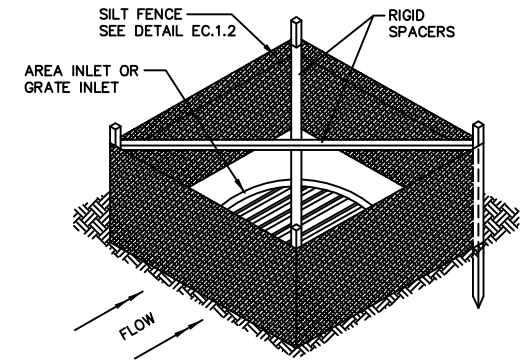

SILT FENCE INLET BARRIER

N.T.S.

EC.1.3

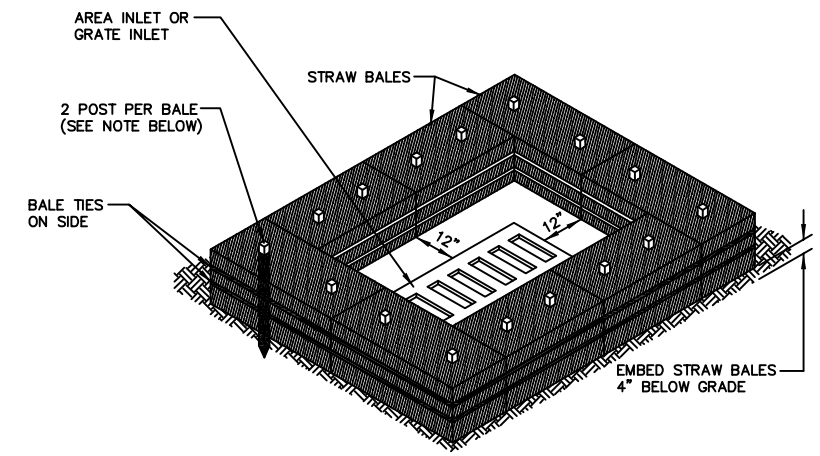

NOTE:
POSTS SHALL BE A MINIMUM OF 48" IN LENGTH. POSTS SHALL BE EITHER 2" x 2" WOOD, 2.5" DIA. SCH. 40 STEEL PIPE, OR STANDARD STEEL "T" OR "U" POSTS.

BALED STRAW INLET BARRIER

N.T.S.

EC.1.4

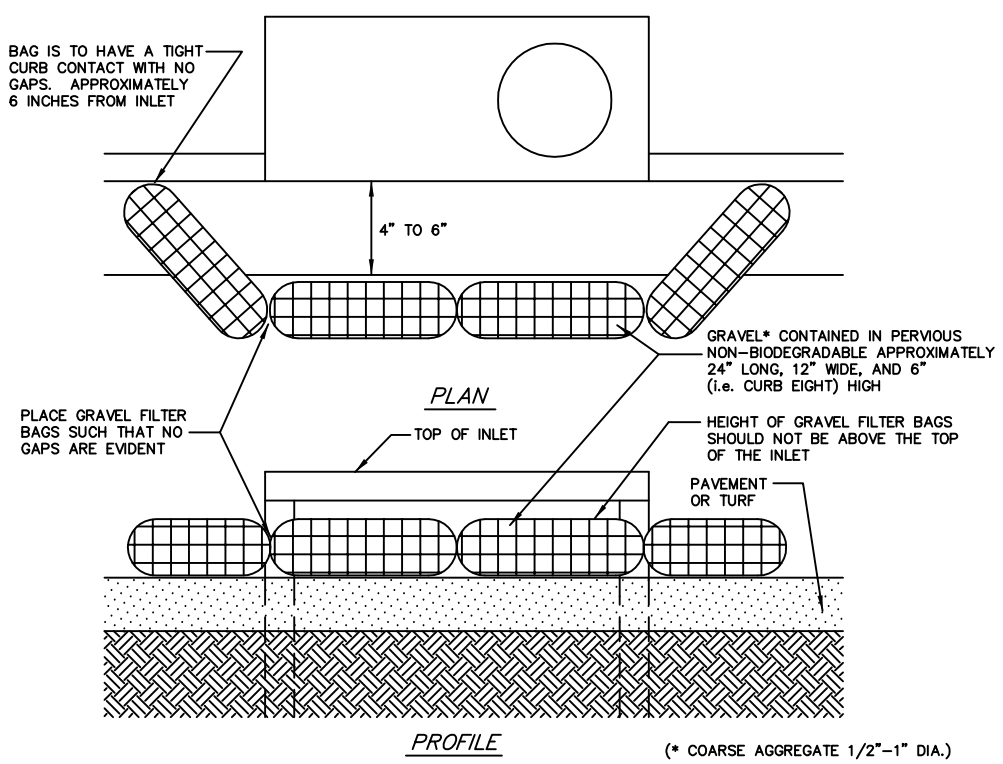

SUMP INLET SEDIMENT FILTER

N.T.S.

EC.1.5

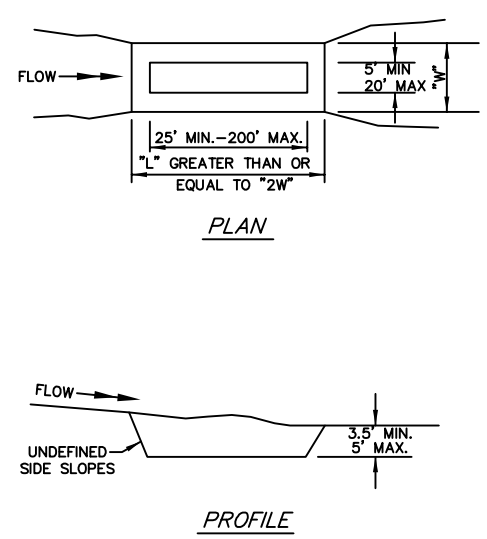

SEDIMENT BASIN

N.T.S.

EC.1.6

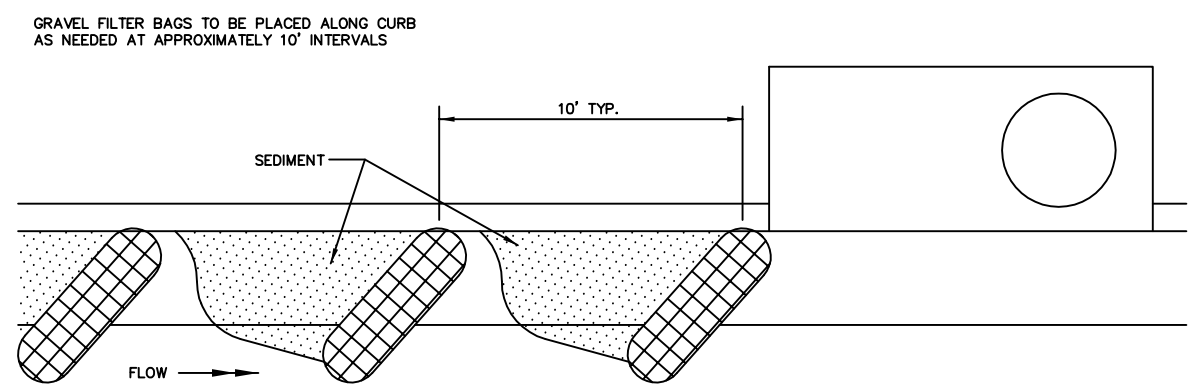

ON GRADE CURB INLET SEDIMENT FILTER

N.T.S.

EC.1.7

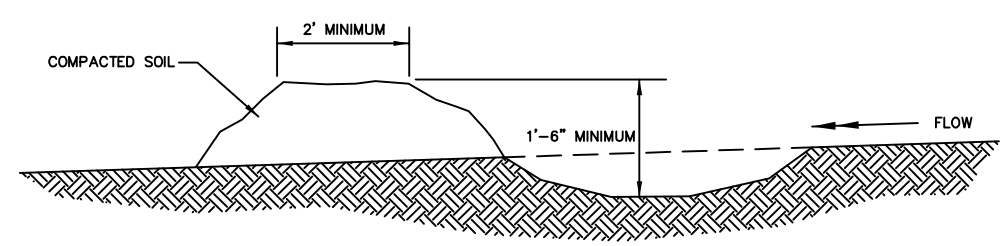

DIVERSION DITCH

N.T.S.

EC.1.8

Revision	Date	BY

Standard Drawings
EROSION CONTROL – BARRIERS
Public Works Construction

The City of Fort Smith Arkansas

CITY OF FORT SMITH
Engineering Department
623 Garrison Avenue, Room 409
Fort Smith, Arkansas 72901
Phone (479)784-2225 Fax (479)784-2245

Project:	Details
Date:	NOV 2012
Scale:	As Shown
Drawn By:	RBR
Dwg. No.:	EC1
Sheet No:	7

G:\DRAWINGS\00-Standard Details\2012\DWG\ 7-EC1.dwg 11/05/12-13:39 RBR