City of Fort Smith Building Services

623 Garrison Avenue
Room 405
Fort Smith, AR 72901

Phone: (479) 784-2206
Fax: (479) 784-1030
buildingsafety@fortsmithar.gov

Accessible Route for Doors Requirements

All code references are form the ICC A117.1-2017

Doors and doorways:

Doors and doorways that are part of an accessible route shall comply with Section 404.

Manual doors and doorways, and manual gates, including ticket gates, shall comply with Section 404.2.

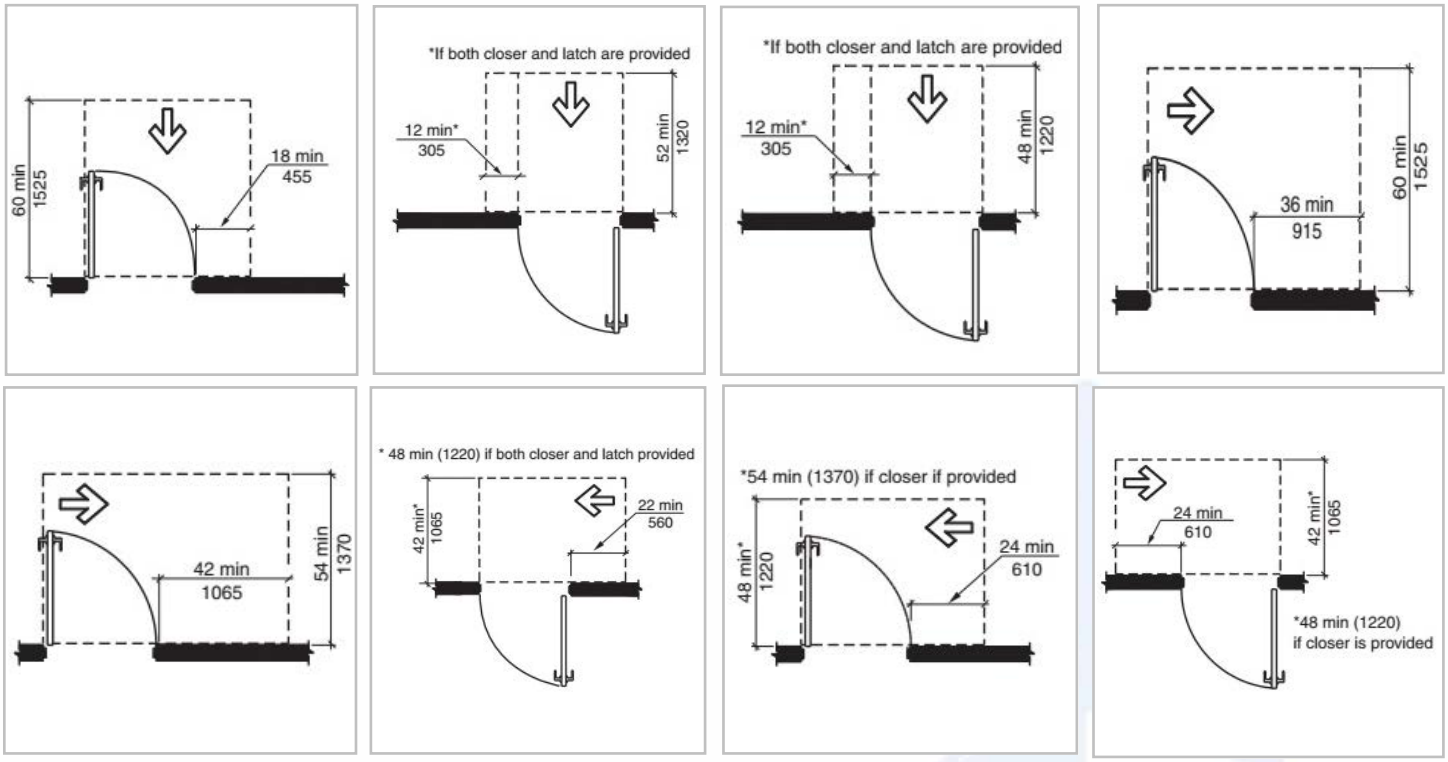

TYPE OF USE		MANEUVERING CLEARANCES AT MANUAL SWINGING DOORS	
Approach Direction	Door or Gate Side	Perpendicular to Doorway	Parallel to Doorway (beyond latch unless noted)
From front	Pull	60 inches (1525 mm)	18 inches (455 mm)
From front	Push	52 inches (1320 mm)[4]	0 inches (0 mm)
From hinge side	Pull	60 inches (1525 mm)	36 inches (915 mm)
From hinge side	Pull	54 inches (1370 mm)	42 inches (1065 mm)
From hinge side	Push	42 inches (1065 mm)[1]	22 inches (560 mm)[3]
From latch side	Pull	48 inches (1220 mm)[2]	24 inches (610 mm)
From latch side	Push	42 inches (1065 mm)[2]	24 inches (610 mm)

[1] Add 6 inches (150 mm) if closer and latch provided.
[2] Add 6 inches (150 mm) if closer provided.
[3] Beyond hinge side.
[4] In existing buildings and facilities, the dimension perpendicular to the door or gate for the front direction on the push side shall be 48 inches (1220 mm)

Urinals shall comply with Section 605.

Urinals shall be of the stall type or shall be of the wall hung type with the rim at 17" maximum above the floor. Urinals shall be 12 1/2" minimum in depth measured from the outer face of the urinal rim to the finished wall surface.

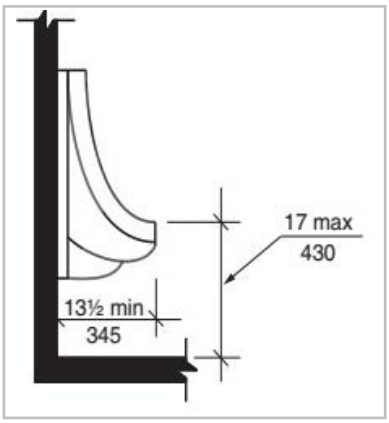

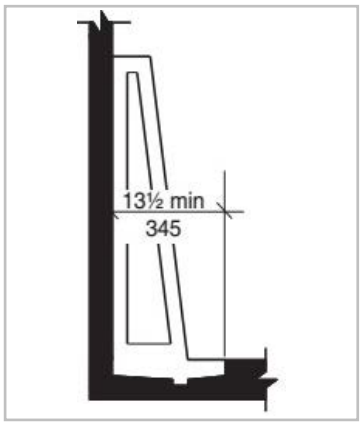

A clear floor space positioned for forward approach shall be provided.

Flush controls shall be hand operated or automatic. Hand operated blush controls shall comply with Section 309.

Lavatories and sinks shall comply with Section 606.

A clear floor space complying with Section 305.3, positioned for forward approach, shall be provided. Knee and toe clearance complying with Section 306 shall be provided. The dip of the overflow shall not be considered in determining knee and toe clearances.

The front of lavatories and sinks shall be 34" maximum above the floor, measured to the higher of the rim or counter surface.

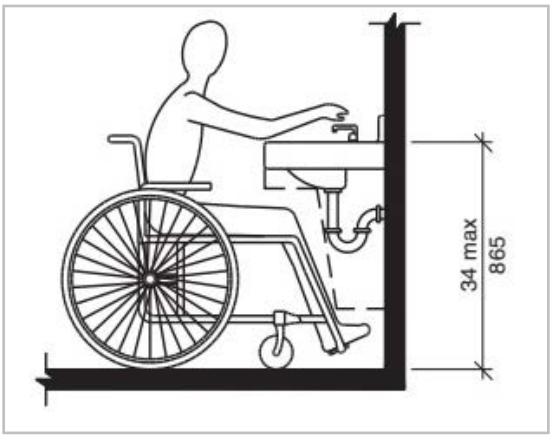

Where enhanced reach range is required at lavatories, faucets and soap dispenser controls shall have a reach depth of 11" maximum. Water and soap outlets shall be provide with a reach depth of 11" maximum.