City of Fort Smith Building Services

623 Garrison Avenue
Room 405
Fort Smith, AR 72901

Phone: (479) 784-2206
Fax: (479) 784-1030
buildingsafety@fortsmithar.gov

Accessible Toilets/Urinals Requirements.

All code references are form the ICC A117.1-2017

Toilet and bathing rooms shall comply with Section 603.

A turning space shall be provided within the room. The required turning space shall not be provided within a toilet compartment.

Doors shall not swing into the clear floor space or clearance for any fixture.

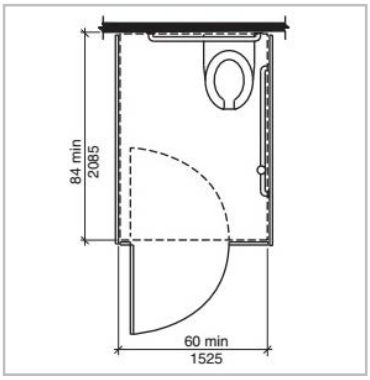

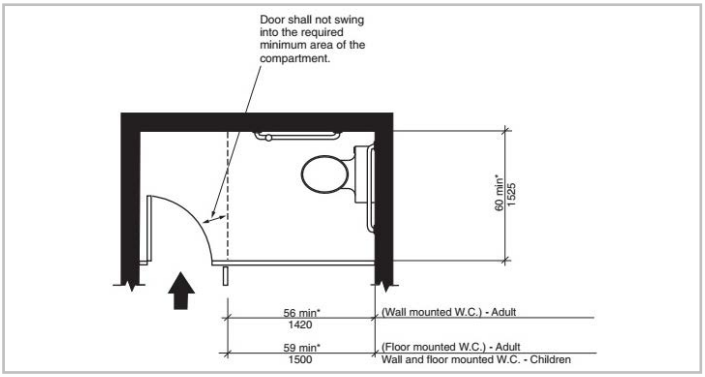

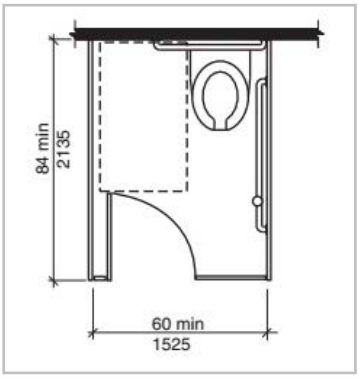

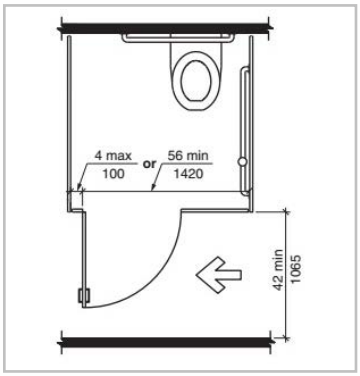

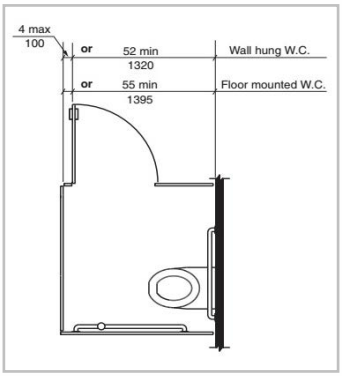

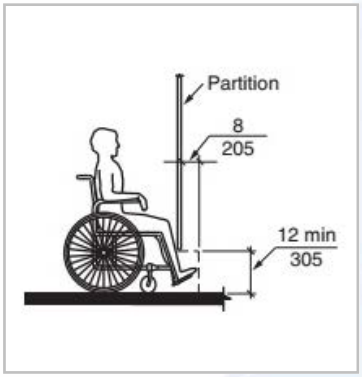

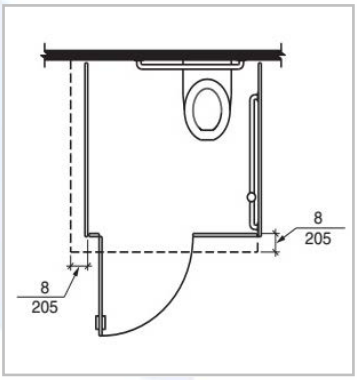

Door Opening Location	Measured From	Dimension
Front Wall or Partition	From the side wall or partition closest to the water closet	56 inches (1420 mm) minimum
	or	
	From the side wall or partition farthest from the water closet	4 inches (100 mm) maximum
Side Wall or Partition Wall-Hung Water Closet	From the rear wall	52 inches (1320 mm) minimum
	or	
	From the front wall or partition	4 inches (100 mm) maximum
Side Wall or Partition Floor-Mounted Water Closet	From the rear wall	55 inches (1395 mm) minimum
	or	
	From the front wall or partition	4 inches (100 mm) maximum

Urinals shall comply with Section 605.

Urinals shall be of the stall type or shall be of the wall hung type with the rim at 17" maximum above the floor. Urinals shall be 12 1/2" minimum in depth measured from the outer face of the urinal rim to the finished wall surface.

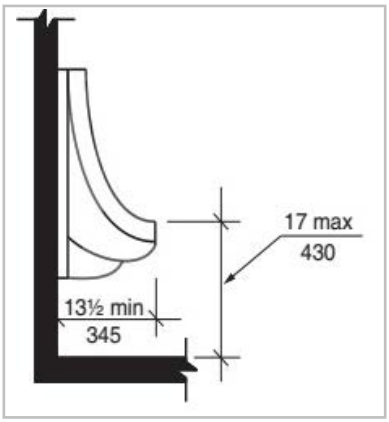

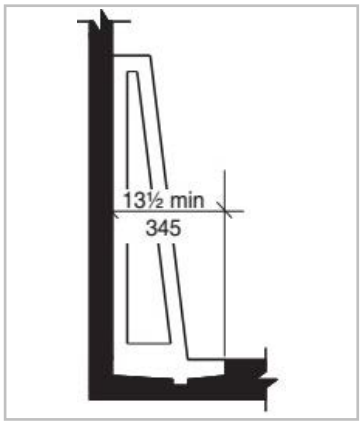

A clear floor space positioned for forward approach shall be provided.

Flush controls shall be hand operated or automatic. Hand operated blush controls shall comply with Section 309.

Lavatories and sinks shall comply with Section 606.

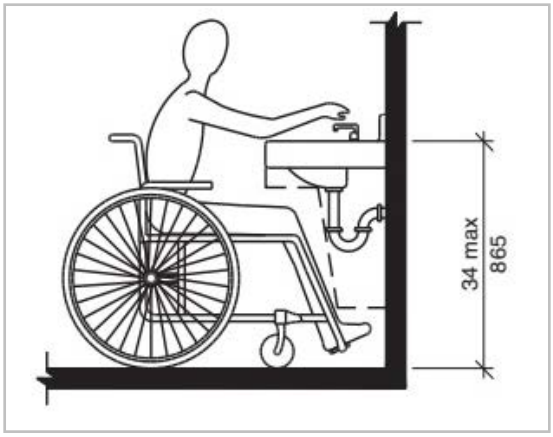

A clear floor space complying with Section 305.3, positioned for forward approach, shall be provided. Knee and toe clearance complying with Section 306 shall be provided. The dip of the overflow shall not be considered in determining knee and toe clearances.

The front of lavatories and sinks shall be 34" maximum above the floor, measured to the higher of the rim or counter surface.

Where enhanced reach range is required at lavatories, faucets and soap dispenser controls shall have a reach depth of 11" maximum. Water and soap outlets shall be provide with a reach depth of 11" maximum.