City of Fort Smith Building Services

623 Garrison Ave – Suite 405
Fort Smith, AR 72901

Phone: (479)784-2206
Fax: (479)784-1030
buildingsafety@fortsmithar.gov

Ramp and Stairway Information

All code references are from the ICC A117.1-2017.

Ramps along accessible routes shall have a running slope greater than 1:20 and not steeper than 1:12.

TABLE 405.2—ALLOWABLE RAMP DIMENSIONS FOR CONSTRUCTION IN EXISTING SITES, BUILDINGS AND FACILITIES

Slope[1]	Maximum Rise
Steeper than 1:10 but not steeper than 1:8	3 inches (75 mm)
Steeper than 1:12 but not steeper than 1:10	6 inches (150 mm)

Cross slope of ramp runs shall not be steeper than 1:48.

The clear width of a ramp run shall be 36" minimum. Handrails and handrail supports that are provided on the ramp run shall not project into the required clear width of the ramp run.

The rise for any ramp run shall be 30" maximum.

Ramps shall have landings at the bottom and top of each ramp run.

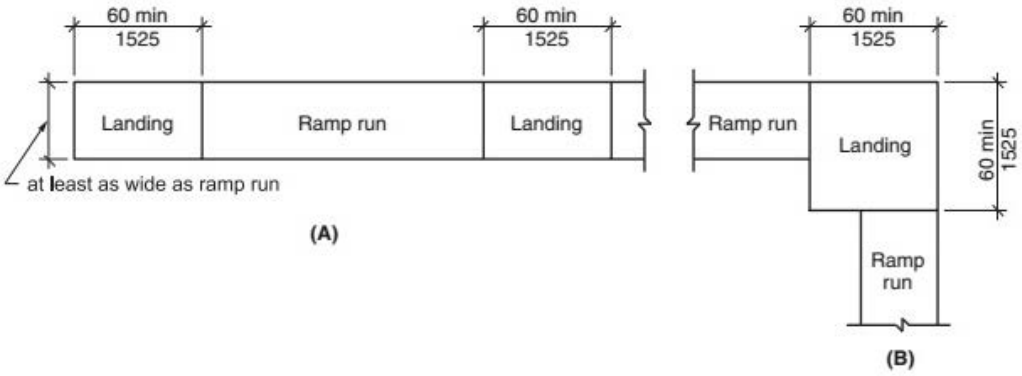

Ramp Landings:

Landings shall have a slope not steeper than 1:48.

Clear width of landings shall be at least as wide as the widest ramp run leading to the landing.

Landings shall have a clear length of 60" minimum.

Where a door or gate is adjacent to a ramp landing, maneuvering clearances required by Sections 404.2.3 and 404.3.4 shall be permitted to overlap the landing area. Where a door or gate that is subject to locking is located adjacent to a ramp landing, the landing shall be sized to provide a turning space complying with Section 304.3.

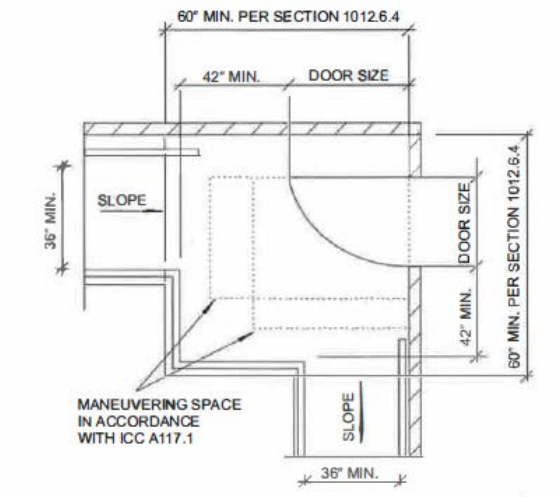

The surface of ramps shall be of slip-resistant materials that are securely attached.

Outdoor ramps and outdoor approaches to ramps shall be designed so that water will not accumulate on walking surfaces.

Ramps with a rise greater than 6 inches shall have handrails on both sides.

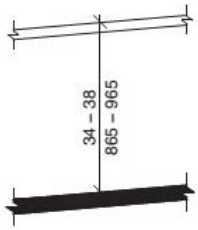

HANDRAIL HEIGHT - RAMPS

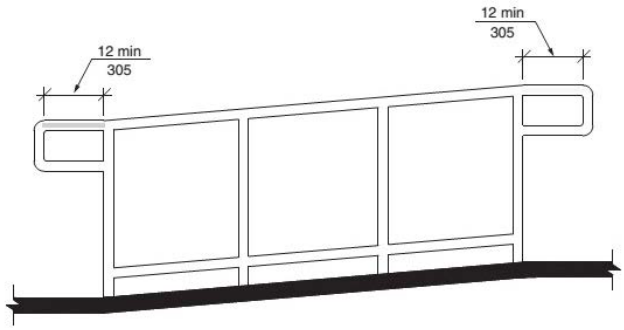

TOP AND BOTTOM HANDRAIL EXTENSION AT RAMPS

Stairways:

All steps on a flight of stairs shall have uniform riser height and uniform tread depth. Risers shall be 4" minimum and 7" maximum in height. Threads shall be 11" minimum in depth.

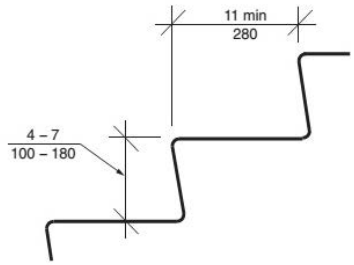

TREADS AND RISERS FOR STAIRWAYS

Handrails:

Handrails shall be provided on both sides of stairs and ramps.

Handrails shall be continuous within the full length of each stair flight or ramp run. Inside handrails on switchback or dogleg stairs or ramps shall be continuous between flights or runs. Other handrails shall comply with Sections 505.10 and 307.

Top of gripping surfaces of handrails shall be 34" minimum and 38" maximum vertically above stair nosings, ramp surfaces. Handrails shall be at a consistent height above stair nosings, ramp surfaces.

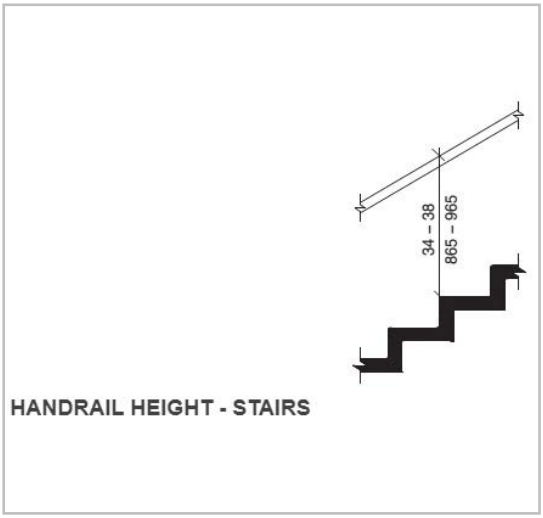

Clearance between handrail gripping surface and adjacent surfaces shall be 1 1/2" minimum.

Handrails shall have a cross section complying with Sections 505.7.1 or 505.7.2.

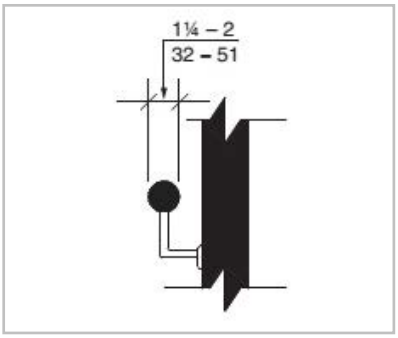

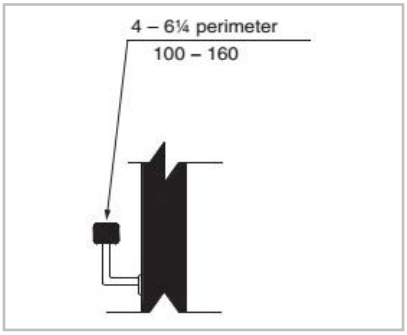

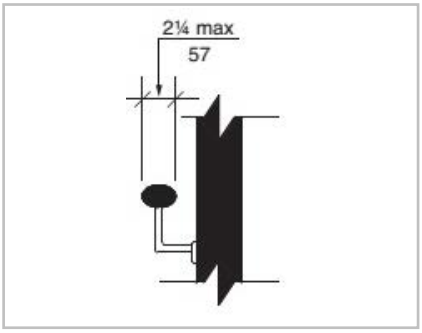

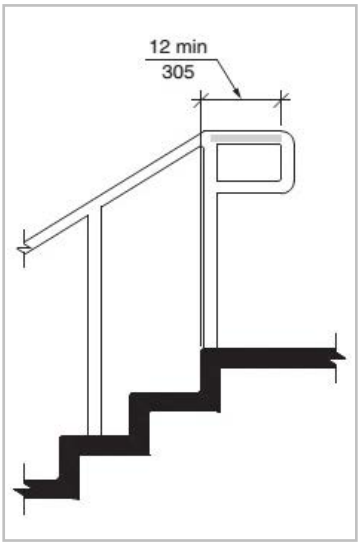

At the top of a stair flight, handrails shall extend horizontally above the landing for 12" minimum beginning directly above the landing nosing. Extensions shall return to a wall, guard, or the landing surface, or shall be continuous to the handrail of an adjacent stair flight.
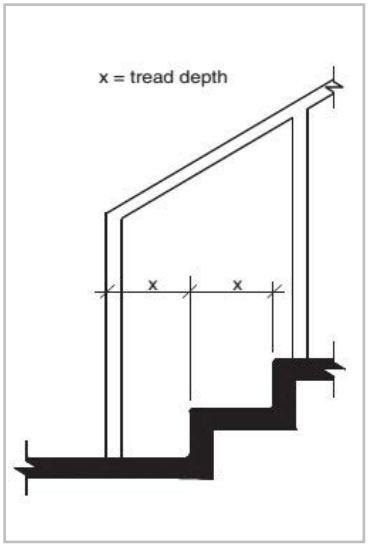
At the bottom of a stair flight, handrails shall extend at the slope of the stair flight for a horizontal distance equal to one tread depth beyond the bottom tread nosing. Extensions shall return to a wall, guard, or the landing surface, or shall be continuous to the handrail of an adjacent stair flight.